fiora | TOUCH YOUR BATHROOM

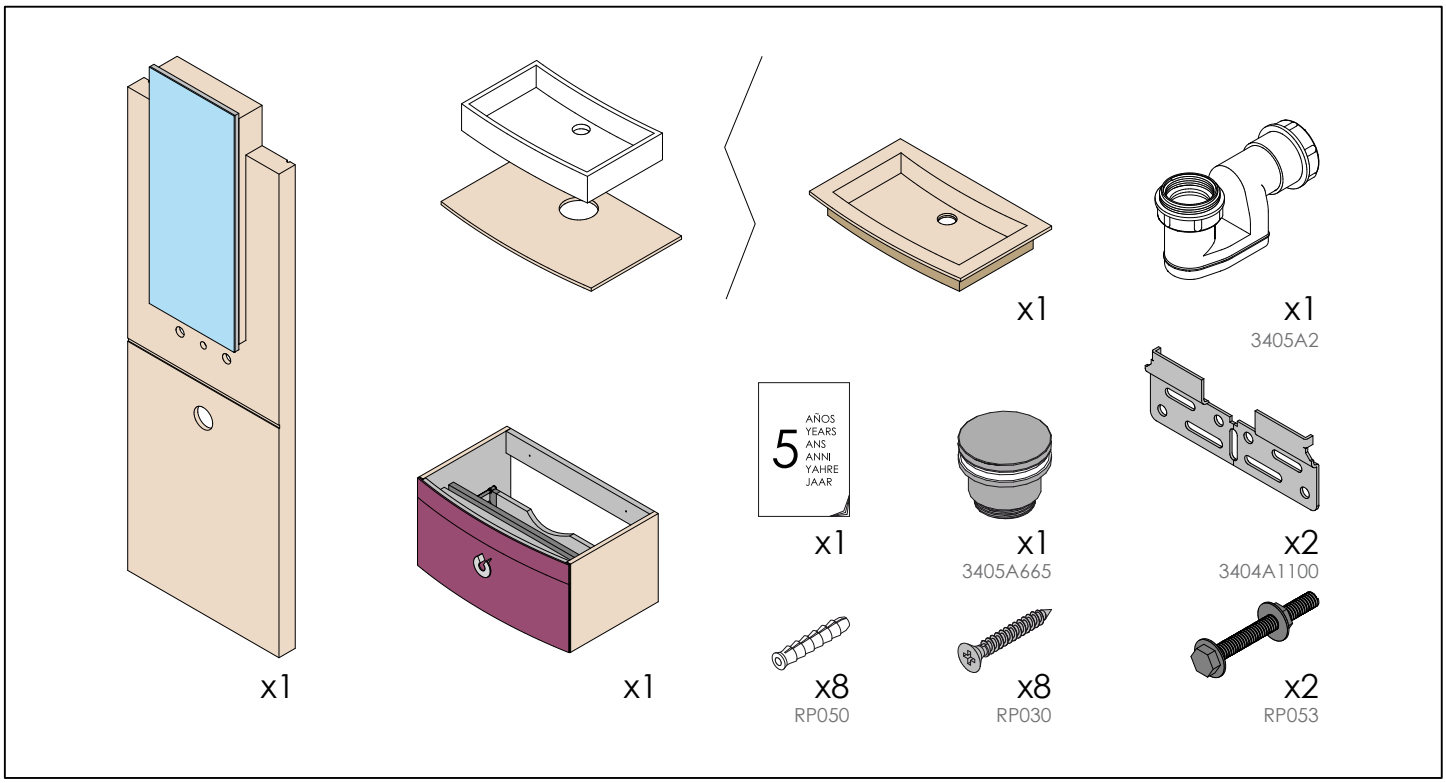

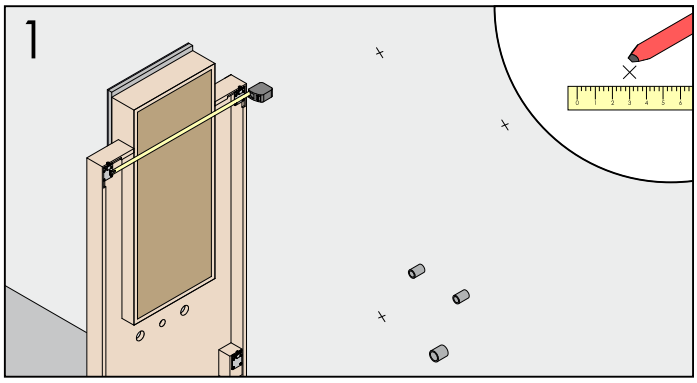

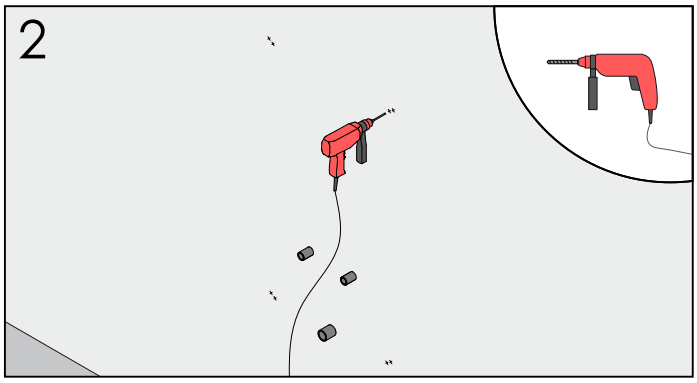

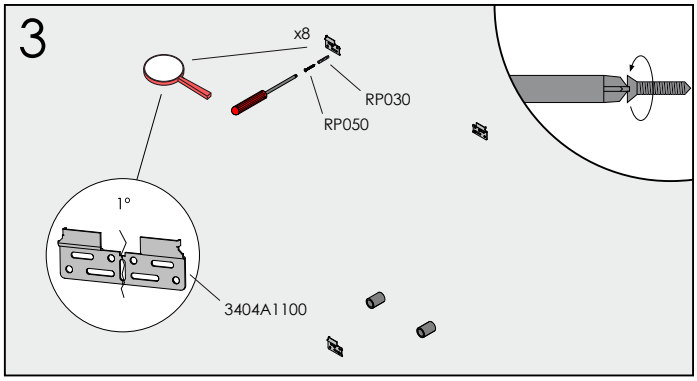

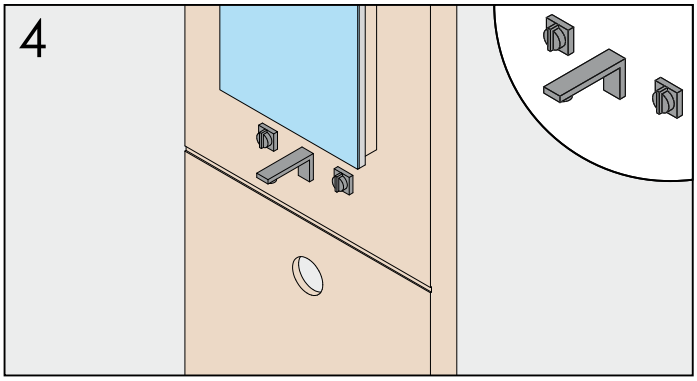

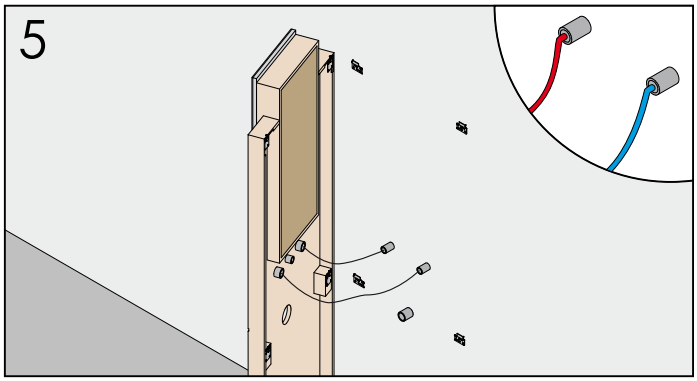

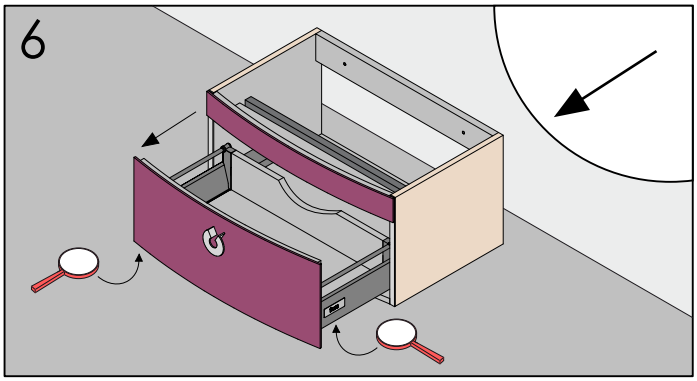

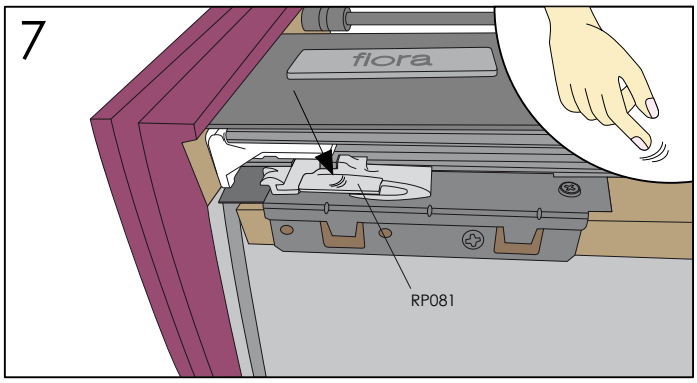
7
flora
RP081

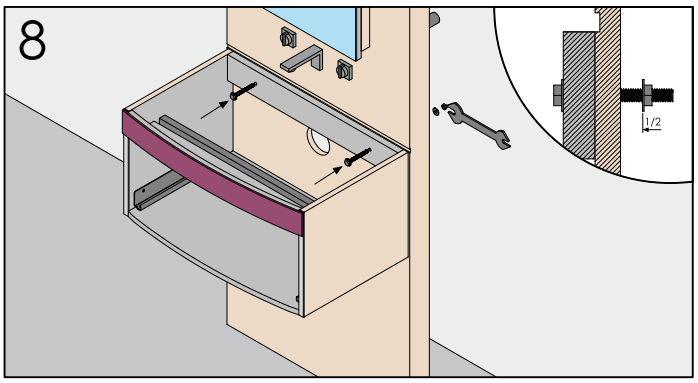
8
1/2

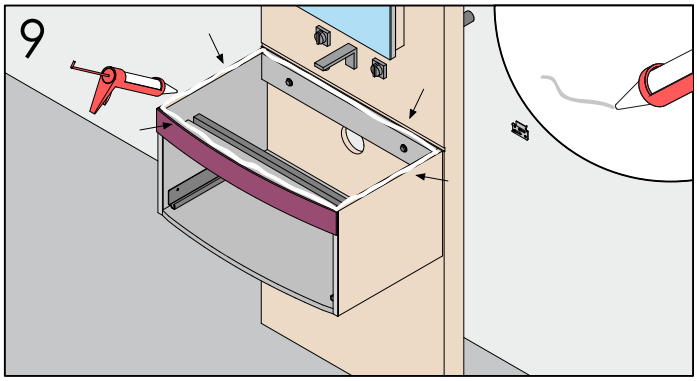
9

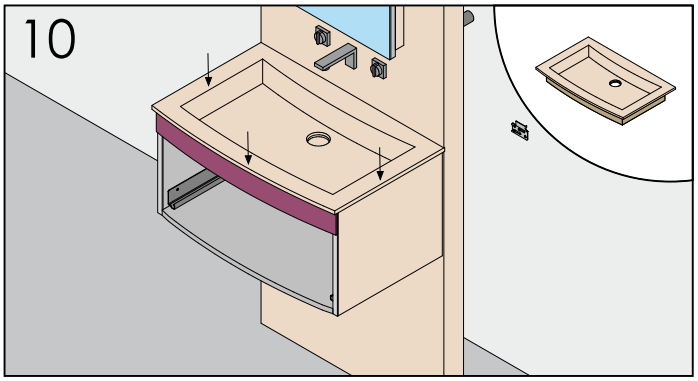
10

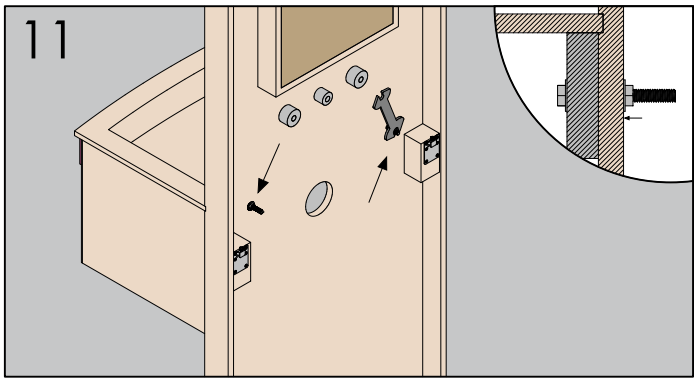
11

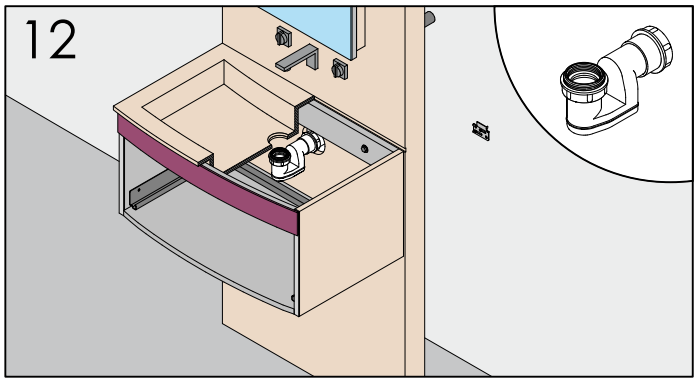
12

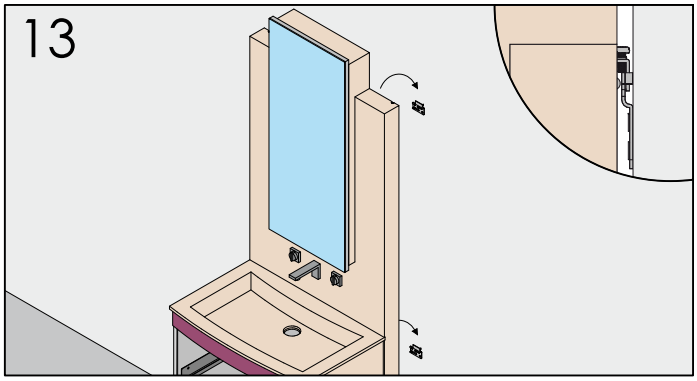
13

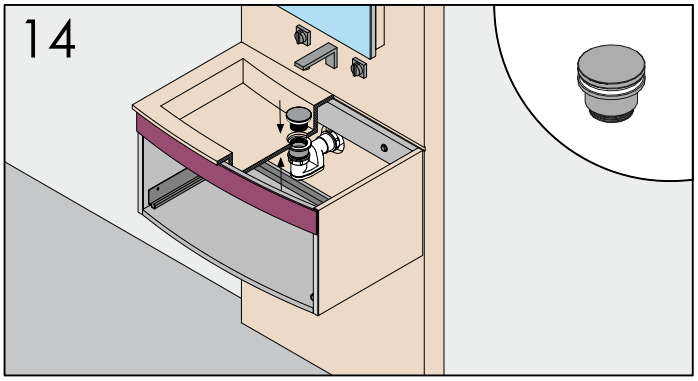
14

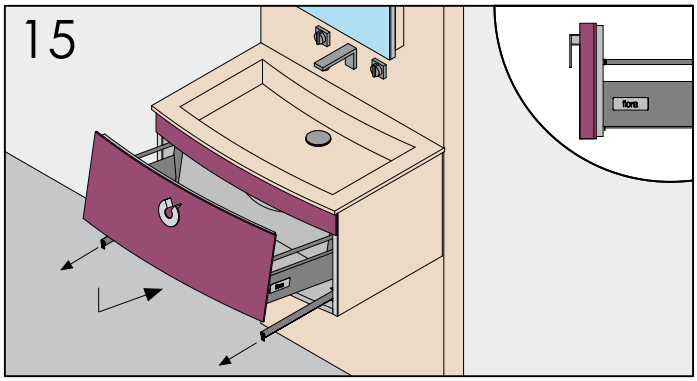
15
flora

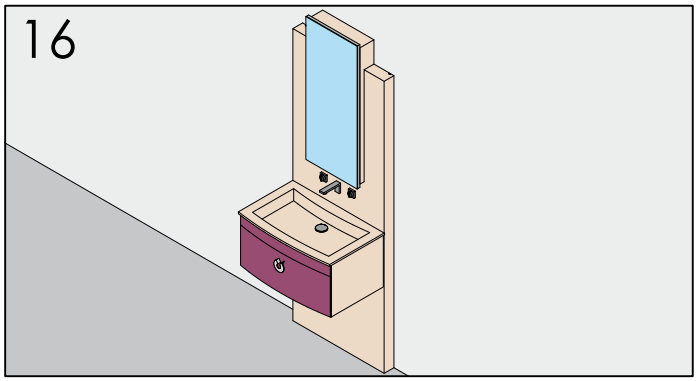
16